气动执行器 82-83-84系列

PNEUMATIC ACTUATORS SERIES 82-83-84

BONOMI

GROUP

VALBIA

只有卓越的品质才能在国际市场上竞争
只有充满热情和精力的团队才能直面挑战
才能够研发出高质量的新产品
我们作为这样的一个团队，会努力做到完美
并热忱的为所有客户提供满意的服务。
我们已经准备好了!

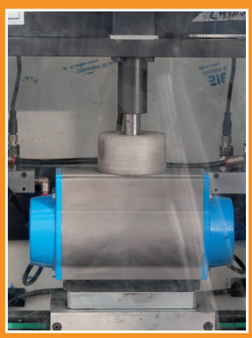

Only excellence allows to compete in the international market. The challenge can be faced thanks to the passion and the energy of the researchers, who plan and manufacture avant-garde quality and technology, a team which is perfectly integrated for providing total customer satisfaction; we are ready!

证书 - APPROVALS

ISO 9001 - ISO 14001 - ISO 50001 - OHSAS 18001

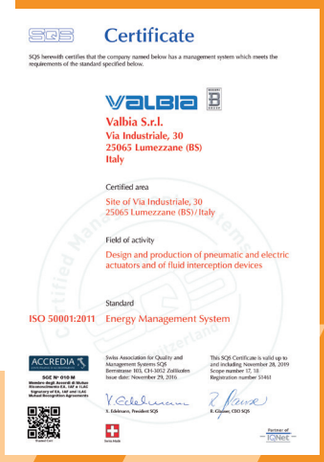

保险 - INSURANCE

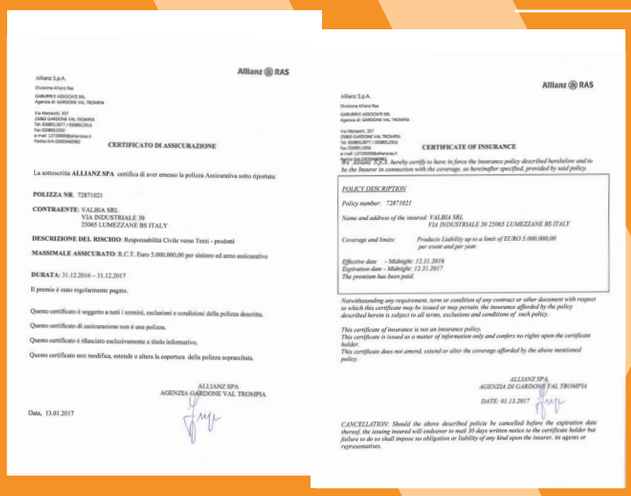

为了客户生产安全，
Valbia 所有产品都购买了国际保险。技术部门和销售部门准备好为客户提供优质的服务。

The whole product range of Valbia is covered by international insurance for customer safety.
Our technical and commercial service is at your disposal.

产品证书 - PRODUCT APPROVALS

SIL 气动执行器
SIL pneumatic actuator

ATEX 气动执行器
ATEX pneumatic actuator

CENED Certificazione ENergetica degli EDifici
Azienda certificata classe “A” - “A+”
con certificato n.17081 - 000459/12 e 000460/12

AEOF
Authorized Economic Operator (AEOF)

PED CE 0036
TÜV Süddeutschland Bau und Betrieb GmbH
Pressure Equipment Directive 97/23/EC

ATEX CE Ex
TÜV Süddeutschland Bau und Betrieb GmbH
Equipment for use in potentially
explosive atmospheres 94/9/EC

CPR CE 0086
BSI British Standars institute
Construction Products Directive
Regulation (EU) n. 305/2011

SIL
TÜV Süddeutschland Bau und Betrieb GmbH
Safety Integrity Level

Ministero dell’Interno

RINA Registro Italiano Navale

a2a Reti Gas · 2i Rete Gas · SNAM ITALGAS

Deutscher Verein des Gas- und Wasserfaches
DVGW W 534 - W 531 - VP 614
DVGW GW 335-B4 - DVGW G 5600-I

TÜV Süddeutschland Bau und Betrieb GmbH
T.A. LUFT

TÜV Bayern Hessen Sachsen Südwest E.V.
FIRE SAFE BS 6755 Part.2, API Specification
6FA und ISO 10497

DBI GTI Gastechnologishes Institut
UNI TS 11343

Germanischer Lloyd Maritime

SVGW SSIGE
Schweizerischer Verein des Gas- und Wasserfaches
Europäische Vorschrift EN 331: 1998

Factory Mutual Research

Underwriters Laboratories Inc.

Underwriters Laboratories Inc.
ANSI/NSF 61 -372 Drinking Water System Components
and Lead Contenent Verification

American Petroleum Institute
API 6A
License number 6A-1741

American Petroleum Institute
API 6D
License number 6D-1428

Technical Standards and Safety Authority

CSA International

Water Regulation Advisory Scheme
(By WRC Evalutation & Testing Centre)

Lloyd’s Register Marine

Bureau Veritas Industry Division

Bureau Veritas Marine Division

Laboratoire Santé Environnement Hygiène de Lyon
ACS: Attestation de Conformité Sanitarie

Certification body 3 - Zds “Tisk”

Declaration of conformity TP-TC 010/2011
Declaration of conformity TP-TC 032/2013

Det Norske Veritas Maritime

产品介绍

Valbia 气动执行器采用的是齿轮齿条结构,双动/单动可选,旋转角度有0-90° 和0-180° ,这种执行器主要用于工业过程控制,自动开关和调节装置等。Valbia产品用材考究,采用独特的专利设计,确保了产品在其整个使用寿命中的高质量,高性能以及可靠的稳定性。采用不同材质和结构形式,使得Valbia执行器能够适用于不同的应用领域以及操作环境, 并且通过了相关认证,可以在主要的工业领域使用（从食品饮料到油气行业）, 在欧洲和国际市场赢得竞争，VALBIA 能够根据不同的使用要求提出最适合的解决方案。并提供各种附件，如:
电磁阀，限位开关，定位器，应急手轮操作器和用于手动干预的杠杆。

Valbia 主要生产以下三种气动执行机构:
• 82系列, 铝， 旋转角度 0° - 90° ;
• 83系列, 铝， 旋转角度 0° - 180° ;
• 84系列, 不锈钢， 旋转角度 0 -90°

除了以上标准产品以外,为了满足特殊应用场合的要求,Valbia还可提供定制服务。

GENERAL SPECIFICATIONS

Valbia manufactures rack and pinion pneumatic actuators, available in spring return or double acting version, with 0°-90° standard rotation or 0°-180°. This type of actuator is mainly used in industrial processes, to automate interception and adjustment devices.
Using carefully selected materials, Valbia offers a product with a unique patented design, which is able to guarantee high quality standard, performance and strong reliability throughout its useful life.
The possibility to use various types of construction materials and combinations, makes Valbia actuators versatile and suitable to different applications and operating
environments; the certifications, achieved by the products, allow the usage in all the major industrial sectors (from food & beverage to the O&G market), both in European and International contest.
Valbia is able to propose the most suitable solution according to the different requirements of use and to provide also a wide range of accessories such as solenoid valves, limit switches, positioners, emergency gear operators and levers for manual intervention.

Three series of pneumatic actuators are realized:
• the Series 82, aluminum with 0°-90° rotation;
• the Series 83, aluminum with 0°-180° rotation;
• the Series 84, stainless steel with 0°-90° rotation.

In addition to the standard versions, Valbia offers a wide range of special versions designed to provide specific solutions for any need.

82系列气动执行器 – SERIES 82 PNEUMATIC ACTUATORS

82系列，压铸铝缸体，根据不同扭矩要求，有15个型号可供选择，旋转角度0°-90°，单作用(SR）和双作用（DA）可选.

The series 82, with an extruded aluminum body, is manufactured in 15 models to guarantee a wide range of choice according to the requested torque; it allows a 0°-90° rotation and it is available in the spring return (SR) or double acting (DA) versions.

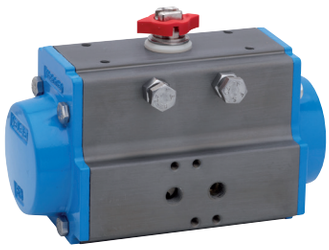

83系列气动执行器 – SERIES 83 PNEUMATIC ACTUATORS

83系列，压铸铝缸体，根据不同扭矩要求，有9种规格可以选择, 只有双作用（DA）可选，通过调节端盖螺钉和凸轮位置， 可旋转0-180°

Available only in the double acting version, the series 83 is manufactured in 9 models according to the different torque output required. These actuators can provide a 0°-180° rotation with the possibility to regulate the run of the actuator by using the cam adjustment but also with the screws mounted on the end caps.

84系列气动执行器 – SERIES 84 PNEUMATIC ACTUATORS

84系列与82系列除了材质不同以外，结构和技术特征是一样的。84系列不管是缸体还是端盖， 齿条采用的都是不锈钢材质，共有5种规格可选。

The series 84 presents the same compact design and the same technical features of the series 82, with the exception of construction material; the series 84 of Valbia is, in fact, manufactured using body, and caps and pinion in stainless steel and it is available in 5 models.

压铸铝缸体 按UNI 6060标准:
- 内表面为阳极硬化处理，标准品光洁度可达 45-50 (micron).
- 内表面的加工精度较高, 耐磨性，高耐腐蚀性。.
- 如环境所需, 亦可采用镀镍或P.T.F.E 防腐处理
- 内表面的加工精度较高,
- 低摩擦，高寿命。

BODY MANUFACTURED FROM EXTRUDED ALUMINIUM UNI 6060:
– Hard-coat anodized as standard finish 45-50 (micron).
– Good wear resistance.
– High corrosion resistance.
– Special finishes nickel-plating or P.T.F.E coated for corrosive environments upon request.
– Bore finished to high standard to ensure low friction and long life.

弹簧组件:
- 标准品经过磷酸盐化处理。.
- 高强度和高可靠性。
- 可适合不同空气压力和扭矩。
- 长安全螺栓，易于拆除。
- 相同的DA/SR系列，其壳体体尺寸相同。

CONCENTRING SPRING SETS
– Standard coating painted.
– High resistance and reliability.
– Spring sets to suit different air pressure/torque requirements.
– Long securing screws to allow safe dismantling for maintenance.
– Same body dimensions for DA/SR versions.

压铸端盖:
- 标准品为聚酯粉末涂层.
- 如环境所需, 亦可采用镀镍或 P.T.F.E 防腐处理

DIE CAST ALUMINIUM END CAPS:
– Standard polyester powder coated
– Special finishes nickel-plating or P.T.F.E coated for corrosive environments upon request.

安装螺栓:
- 标准材为不锈钢.

ASSEMBLING SCREWS:
– Stainless steel as standard.

外部连接:
- 顶部连接: 符合.NAMUR标准
- 电磁阀连接: 符合NAMUR标准.
- 底部标准: ISO 5211-DIN 3337.

EXTERNAL CONNECTION:
– Top of pinion according to Namur norm.
– Solenoid valve connection according to Namur norm.
– Bottom of pinion according to ISO 5211-DIN 3337.

基本参数:
- 最大工作压力: 8 bar.
- 工作温度:

标准(-20° C; +85° C), 高温 (-20° C; +150° C), 低温 (-40° C; +85° C).
- 自润滑，高寿命。
- 100% 出厂测试。.

NOMINAL VALUES:
– Pressure rating max 8 bar.
– Working temperature:
standard (-20°C; +85°C), high (-20°C; +150°C), low (-40°C; +85°C).
– Lubrification guaranteed for the entire actuator lifetime.
– 100% fully tested on manufacture.

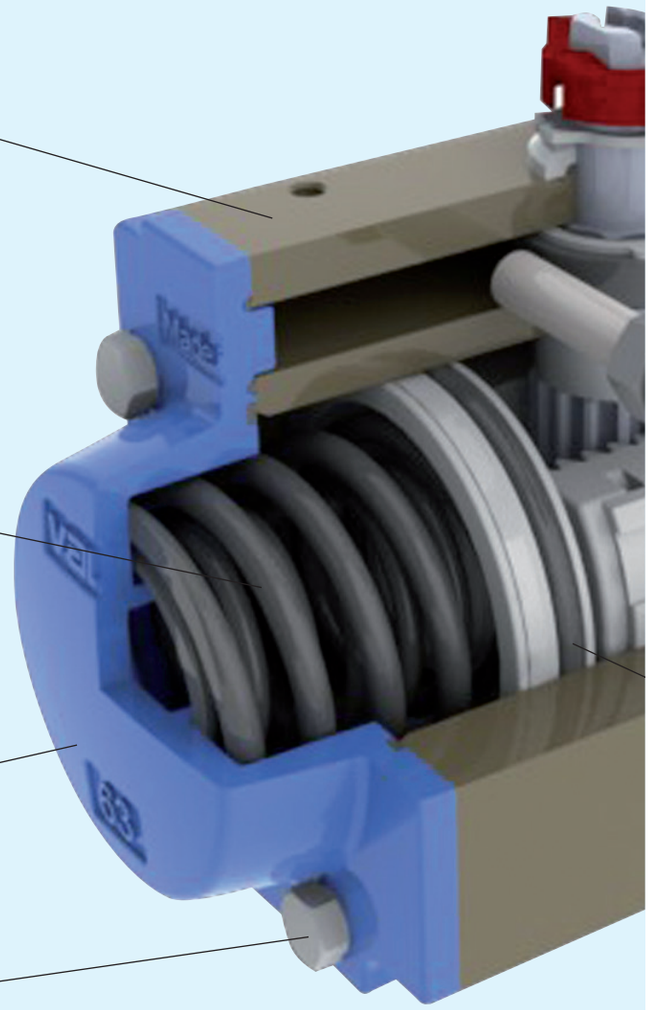

专利

Valbia气动执行器具有独立双腔的专利结构，即凸轮和调节螺栓与活塞分别在两个独立的腔体里，使凸轮和调节螺栓不受压力影响。该专利结构减小了执行器发生泄漏的可能性，使执行器性能更好，使用寿命更长。

防脱出式设计
ANTI-BLOWOUT SYSTEM

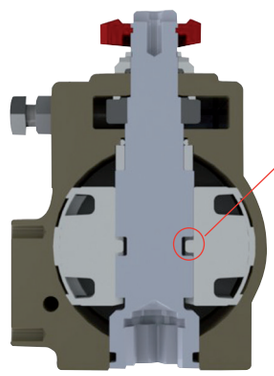

防脱出齿轮平键的活塞
Piston provided with anti-blowout flat key.

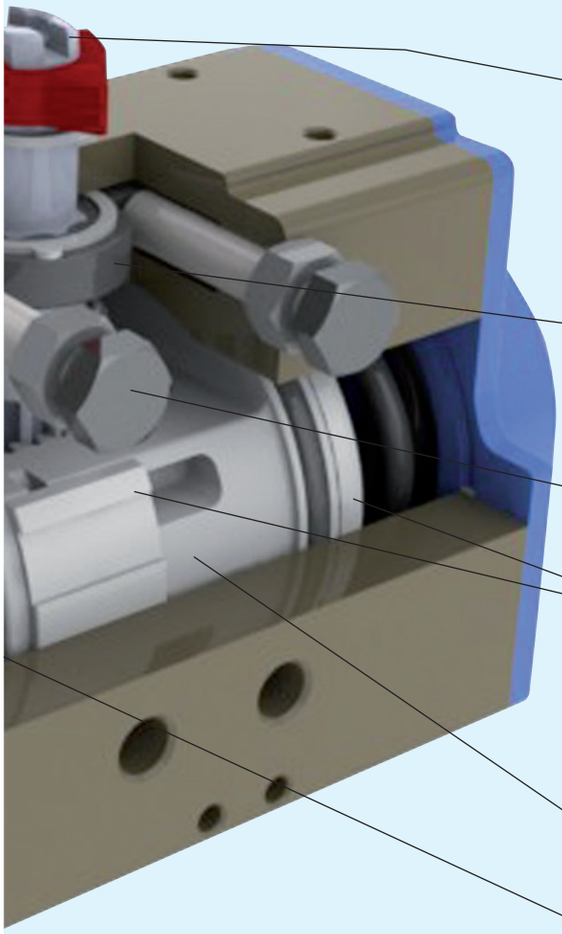

钢齿条：
- 标准品为表面镀镍，以防腐。
- 防腐环境可选用不锈钢材质。.
- 防脱出式设计。.

PINION MADE IN STEEL:
– Nickel-plated against internal and external corrosion for standard version.
– Stainless steel for corrosive environments upon request.
– Anti-blowout design.

凸轮可调的位置. 0°-90°
- 不锈钢.
- 可调整打开和关闭的位置 ± 5°.

CAM FOR LIMIT POSITION ADJUSTMENT 0°-90°
- Stainless steel.
- Adjustment for open and close position ± 5°.

0° –90 调整螺栓
- 不锈钢0–90°

ADJUSTMENT SCREWS
- Stainless steel.

POM材质活塞导向件:
- 接触面积大.。
- 自润滑，低摩擦。.
- 长寿命。

PISTON GUIDES IN POM:
– Large contact area.
– Low friction for self lubricating material.
– Long life.

压铸铝活塞:
- 依据要求可进行镀镍处理.

PISTONS MADE FROM DIE CAST ALUMINIUM:
– Chemical nickel-plating upon request.

密封:
- 标准密封材质: NBR（丁晴橡胶）.
- 高温密封材质: Viton（氟橡胶）.
- 低温密封材质: silicon.（硅橡胶）

SEALS:
– Standard version: NBR.
– High temperature version: Viton.
– Low temperature version: silicone.

双齿轮齿条式设计:
- 扭矩输出恒定.
- 结构紧凑.
- 受力均衡.
- 可靠性的强度设计，确保长寿命.

TWIN RACK AND PINION DESIGN:
– Constant torque output.
– Compact design.
– Balanced internal forces.
– Robust design to ensure long life.

PATENTED

The pneumatic actuator has a patented solution for the cam and the double adjustment stop bolts chamber. Such area is separated from the pistons chamber, and it is not subject to pressure containing, contrary to our competitors' products. This solution reduces the eventual leaking points and it enables better performances and long-term reliability of our actuators.

不同安装
MOUNTING VARIATIONS

关 - Closed　　开 - Open

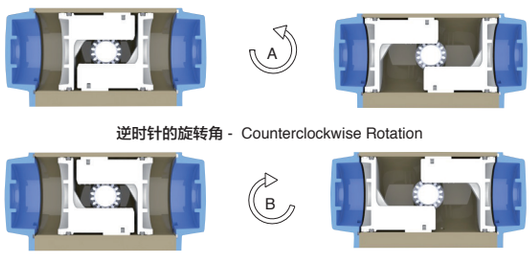

逆时针的旋转角 - Counterclockwise Rotation

顺时针的旋转角 - Clockwise Rotation

俯视图
View from the top of the pinion

32型 MOD. 32

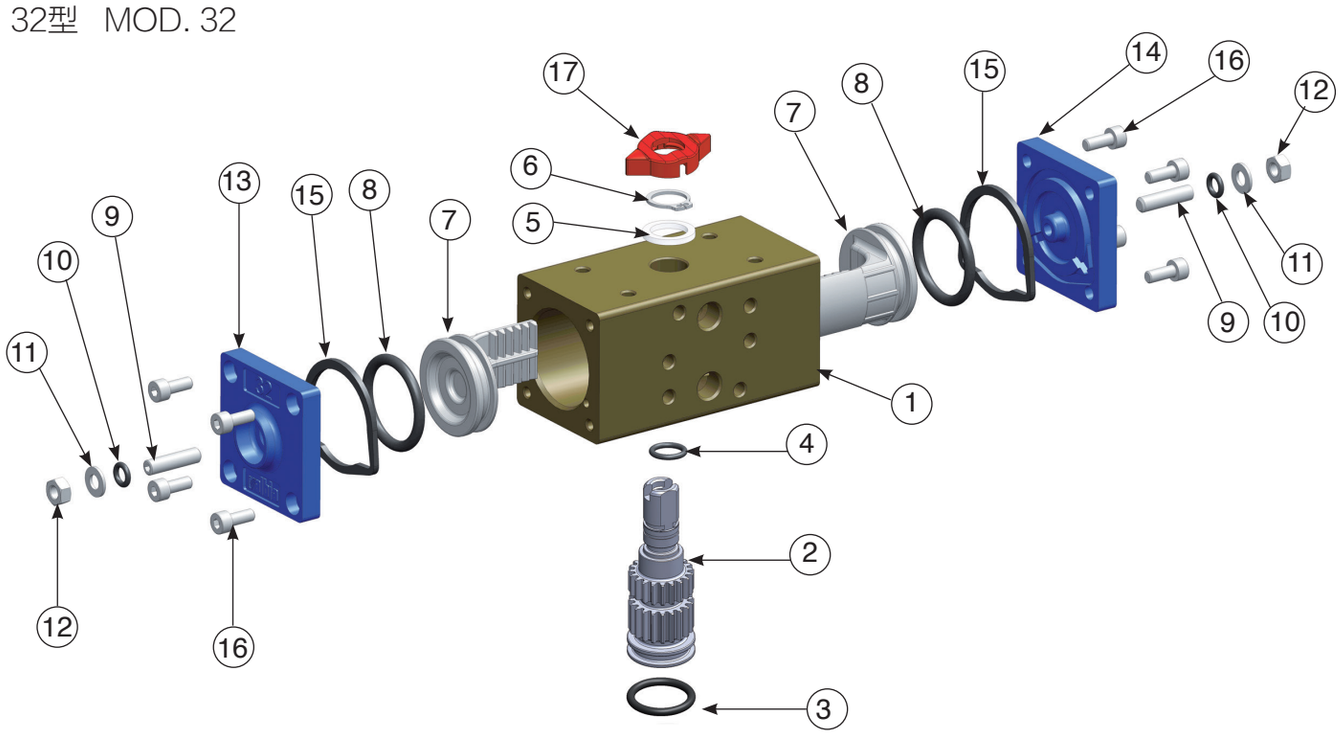

序号. ITEM	部件名称 DESCRIPTION	材料 MATERIAL	表面处理 TREATMENT	数量
1	缸体 - Body	压铸铝- Extruded aluminium	阳极氧化- Hard anodized	1
2	防脱出齿条- Anti-blowout pinion	钢 - Steel	镀镍 - Nickel plated	1
• 3	O形圈- O-ring	NBR		1
• 4	O形圈 - O-ring	NBR		1
• 5	隔离环- Spacer ring	POM		1
6	卡环 - Snap ring	钢 - Steel	镀镍 - Nickel plated	1
7	活塞 - Piston	压铸铝- Die cast aluminium		2
• 8	O形圈- O-ring	NBR		2
9	角度调整螺栓- Stop bolt	不锈钢- Stainless steel		2
• 10	O形圈- O-ring	NBR		2
11	垫圈- Washer	不锈钢- Stainless steel		2
12	角度调整螺栓螺母 - Stop bolt retaining nut	不锈钢- Stainless steel		2
13	左端盖- Left end cap	压铸铝- Die cast aluminium	喷涂 - Painted	1
14	右端盖 - Right end cap	压铸铝- Die cast aluminium	喷涂 - Painted	1
15	端盖密封座- End cap seats	NBR		2
16	紧固螺钉- End cap fixing screw	不锈钢 - Stainless steel		8
17	位置指示器- Position indicator	热塑性橡胶 TPE Thermoplastic rubber TPE		1

• 易损部件 - Parts subject to wear

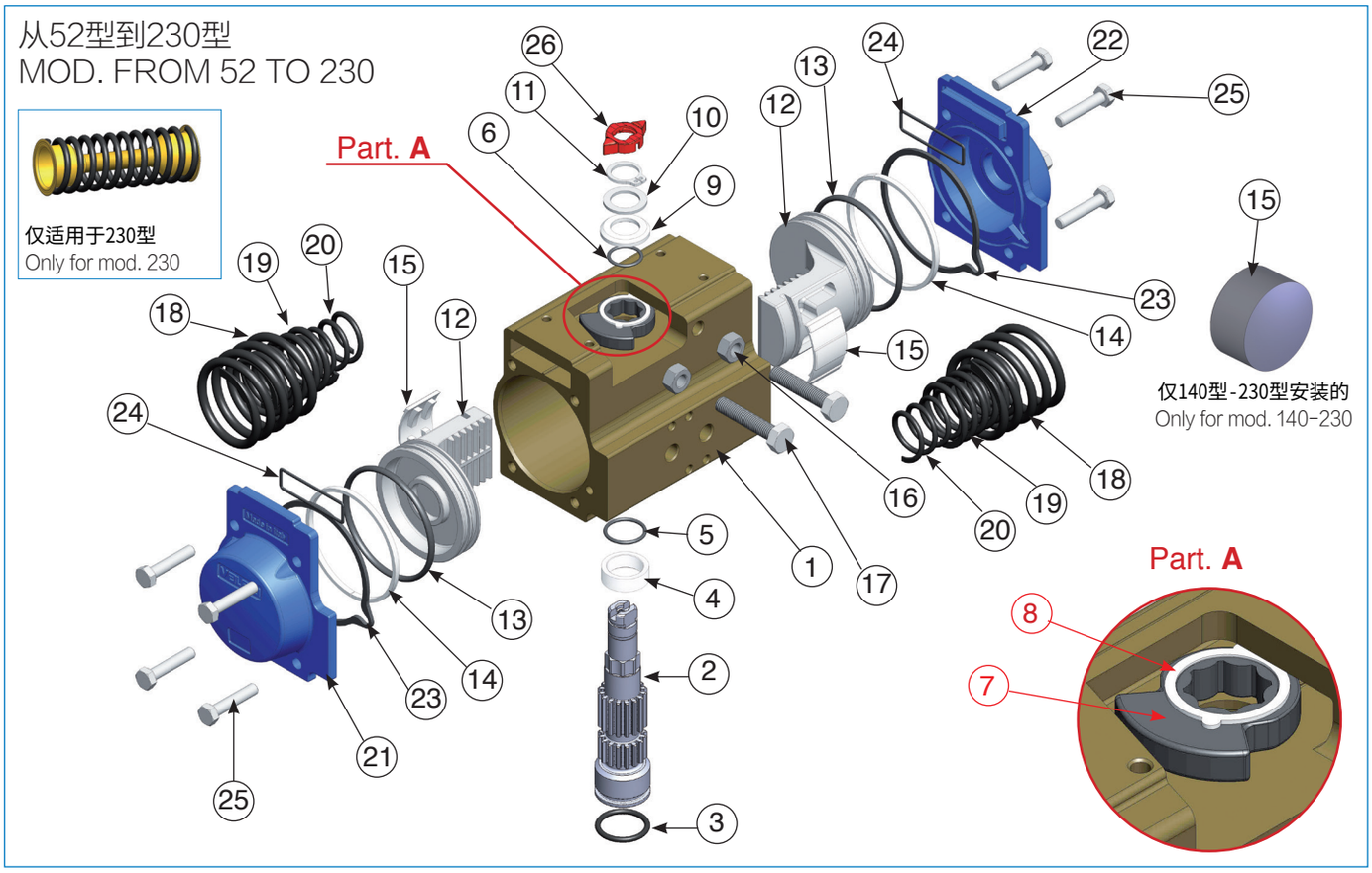

序号. ITEM	部件名称 DESCRIPTION	材料 MATERIAL	表面处理 TREATMENT	数量 DA	数量' SR
1	缸体 - Body	压铸铝- Extruded aluminium	阳极氧化- Hard anodized	1	1
2	防脱出齿条 - Anti-blowout pinion	钢 - Steel	镀镍 - Nickel plated	1	1
• 3	O-形圈 - O-ring	NBR		1	1
• 4	隔离环 - Spacer ring	POM		1	1
• 5	O-形圈 - O-ring	NBR		1	1
• 6	O-形圈 - O-ring	NBR		1	1
7	凸轮 - Cam	不锈钢 - Stainless steel		1	1
8	凸轮环- Spacer	POM		1	1
• 9	隔离环-Spacer	POM		1	1
10	垫圈 - Washer	不锈钢 - Stainless steel		1	1
** 11	卡环 - Snap ring	钢 - Steel	镀镍 - Nickel plated	1	1
12	活塞 - Piston	压铸铝 - Die cast aluminium		2	2
• 13	O-形圈 - O-ring	NBR		2	2
• 14	抗磨环 - Antifriction ring	POM		2	2
• 15	活塞推力块- Thrust block	POM		2 [4]	2 [4]
16	角度调整螺栓螺母 - Stop bolt retaining nut	不锈钢 - Stainless steel		2	2
17	角度调整螺栓- Stop bolt	不锈钢 - Stainless steel		2	2
18	外部弹簧 - External spring	钢 - Steel	喷漆 - Painted	0	查看22页的弹簧组 See spring setting at page 22
*** 19	中间弹簧 - Central spring	钢 - Steel	喷漆 - Painted	0	
20	内部弹簧 - Internal spring	钢 - Steel	喷漆 - Painted	0	
21	左端盖 - Left end cap	压铸铝 - Die cast aluminium	喷涂 - Painted	1	1
22	右端盖 - Right end cap	压铸铝 - Die cast aluminium	喷涂 - Painted	1	1
23	端盖密封座 - End cap seats	NBR		2	2
24	O-形圈 - O-ring	NBR		2	2
25	紧固螺栓 - End cap fixing screw	不锈钢 - Stainless steel		8	8
26	位置指示器 - Position indicator	热塑性 - TPE Thermoplastic rubber TPE		1	1

* 易损部件 - Parts subject to wear ** 更强的系列 DIN 471 - UNI 7436 - Reinforced series DIN 471 - UNI 7436

[4] 只限. 140-160-180-200-230 - Valid for mod. 140-160-180-200-230 only.

*** 只限. 160-180- 200 - Only for mod. 160-180-200.

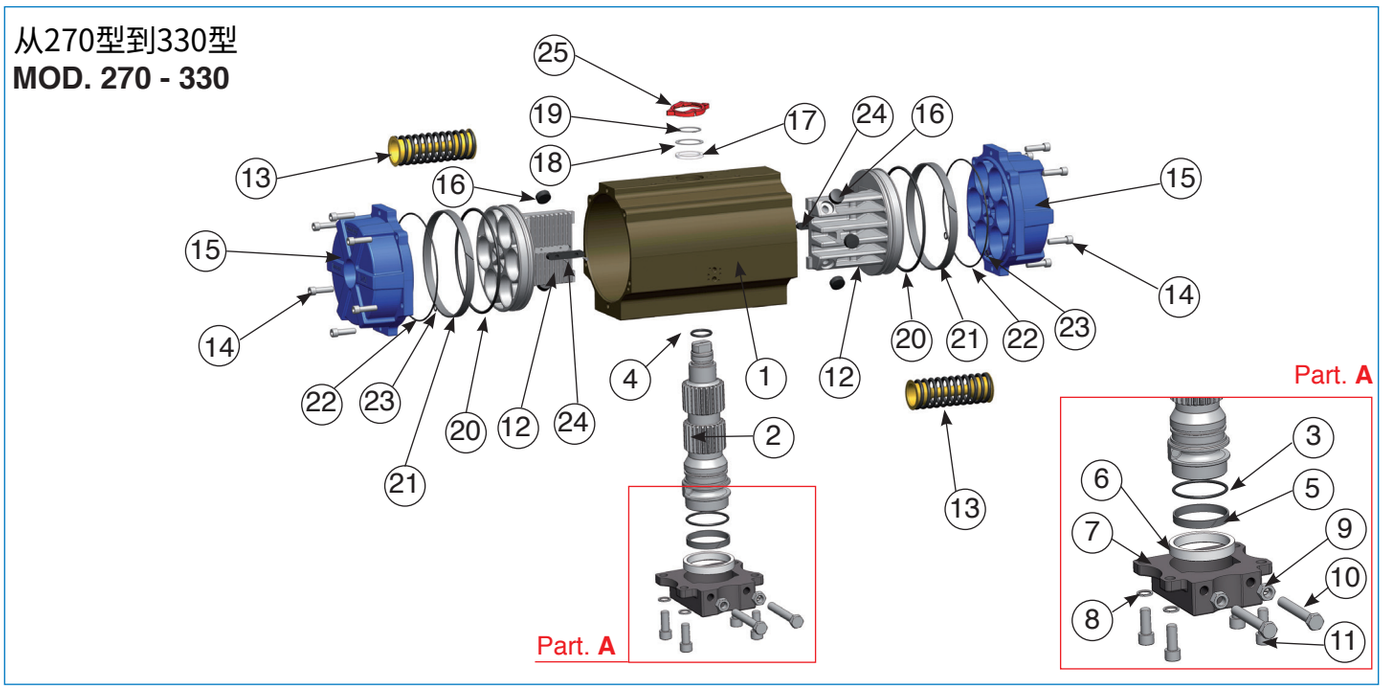

序号. ITEM	部件名称 DESCRIPTION	材料 MATERIAL	表面处理 TREATMENT	数量 DA	数量' SR
1	缸体 - Body	压铸铝 - Extruded aluminium	阳极氧化- Hard anodized	1	1
2	防脱出齿条 - Anti-blowout pinion	钢 - Steel	镀镍 - Nickel plated	1	1
• 3	O-形圈 - O-ring	NBR		1	1
• 4	O-形圈 - O-ring	NBR		1	1
• 5	抗磨环 - Antifriction ring	P.T.F.E 15%石墨- P.T.F.E 15% graphite		1	1
• 6	抗磨环- Antifriction ring	P.T.F.E		1	1
7	金属板 - Plate	mod.270 GGG40 - mod.330 C45	喷漆 - Painted	1	1
8	垫圈- Washer	不锈钢 - Stainless steel		4	4
9	角度调整螺栓螺母- Stop bolt retaining nut	不锈钢 - Stainless steel		2	2
10	角度调整螺栓 - Stop crew	不锈钢 - Steel	镀锌- Zinc plated	2	2
11	固定螺栓- Fixing screws	不锈钢 - Stainless steel		4	4
12	活塞- Piston	压铸铝 - Die cast aluminium		2	2
13	压缩弹簧 - Precompressed spring	钢 - Steel	喷漆 - Painted	0	查看22页的弹簧组 See spring setting at page 22
14	端盖固定螺栓 - End cap fixing screw	不锈钢 - Stainless steel		mod. 270 12 mod. 330 16	mod. 270 12 mod. 330 16
15	端盖 - End cap	压铸铝 - Die cast aluminium	喷涂 - Painted	2	2
• 16	活塞推力块 - Thrust block	POM		mod.270 6 mod.330 8	mod.270 6 mod.330 8
• 17	隔离环 - Spacer ring	POM		1	1
18	齿条垫圈 - Pinion washer	不锈钢 - Stainless steel		1	1
19	卡环 - Snap ring	钢 - Steel	喷漆 - Nickel plated	1	1
• 20	O-形圈 - O-ring	NBR		2	2
• 21	防磨环 - Antifriction ring	P.T.F.E 15%石墨- P.T.F.E 15% graphite		2	2
22	O-形圈 - O-ring	NBR		2	2
23	O-形圈 - O-ring	NBR		mod. 270 4 mod. 330 2	mod. 270 4 mod. 330 2
24	防脱出钥匙 - Anti blowout key	POM		2	2
25	位置指示器 - Position indicator	热塑性 - TPE Thermoplastic rubber TPE		1	1

• 易损部件 - Parts subject to wear

从52型 到160型
MOD. FROM 52 TO 160

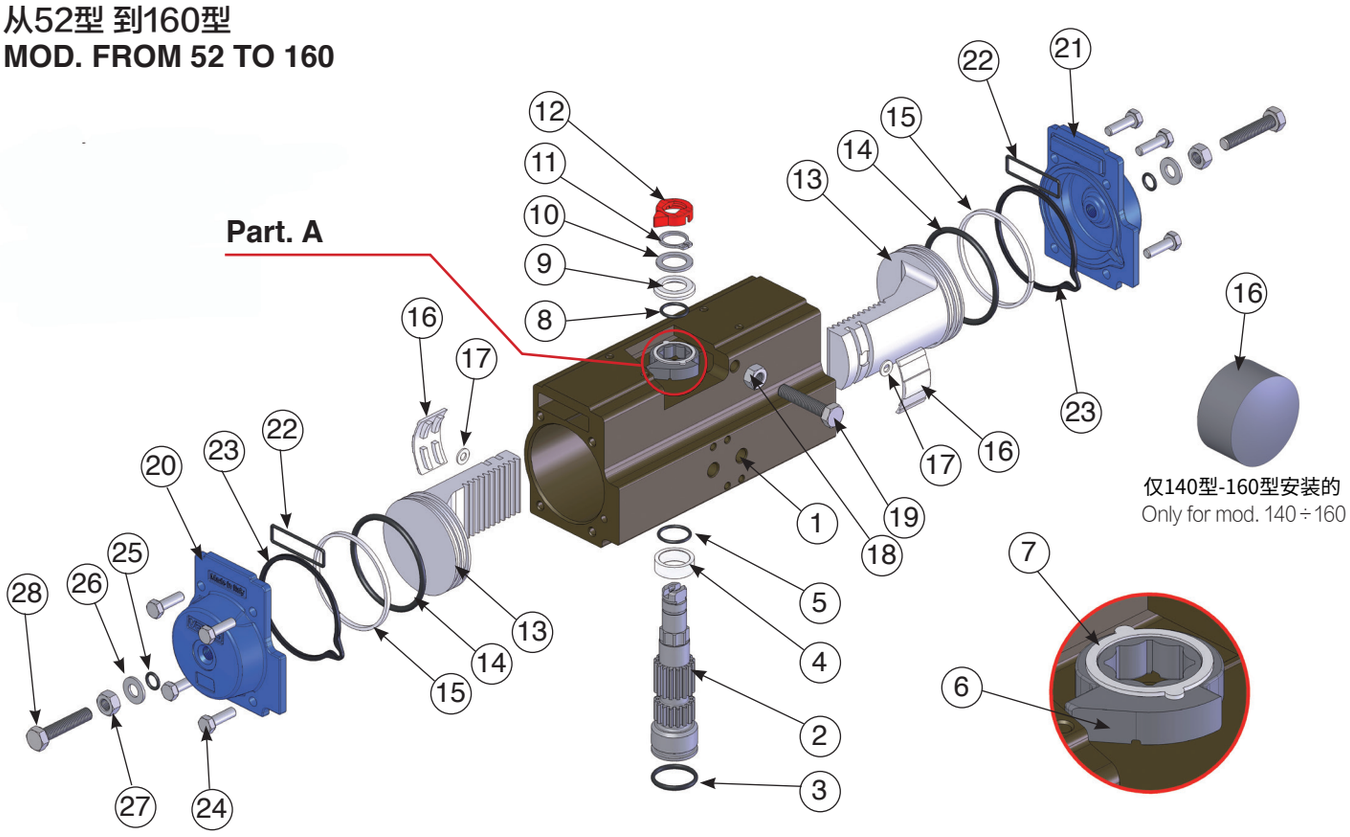

序号. ITEM	部件名称 DESCRIPTION	材料 MATERIAL	表面处理 TREATMENT	数量
1	缸体 - Body	压铸铝- Extruded aluminium	阳极氧化- Hard anodized	1
2	防脱出齿条 - Anti-blowout pinion	钢 - Steel	镀镍 - Nickel plated	1
• 3	O-形圈 - O-ring	NBR		1
• 4	隔离垫环 - Spacer ring	POM		1
• 5	O-形圈 - O-ring	NBR		1
6	凸轮 - Cam	不锈钢- Stainless steel		1
7	凸轮环 - Spacer	POM		1
• 8	O-形圈 - O-ring	NBR		1
• 9	隔离环 - Spacer	POM		1
10	垫圈 - Washer	不锈钢 - Stainless steel		1
•• 11	卡环 - Snap ring	钢 - Steel	镀镍 - Nickel plated	1
12	位置指示器 - Position indicator	热塑性 TPE - Thermoplastic rubber TPE		1
13	活塞 - Piston	压铸铝 - Die cast aluminium		2
• 14	O-形圈 - O-ring	NBR		2
• 15	防磨环 - Antifriction ring	POM		2
• 16	活塞推力块 - Thrust block	POM		2 [4]
17	垫圈 - Washer	不锈钢 - Stainless steel		2 [0]
18	角度调整螺栓螺母 - Stop bolt retaining nut	不锈钢- Stainless steel		1
19	角度调整螺栓 - Stop bolt	不锈钢 - Stainless steel		1
20	左端盖 - Left end cap	压铸铝 - Die cast aluminium	喷漆 - Painted	1
21	右端盖 - Right end cap	压铸铝 - Die cast aluminium	喷漆 - Painted	1
22	O-形圈 - O-ring	NBR		2
23	端盖密封座 - End cap seats	NBR		2
24	端盖固定螺栓 - End cap fixing screw	不锈钢 - Stainless steel		8
• 25	O-形圈 - O-ring	NBR		2
26	垫圈 - Washer	不锈钢 - Stainless steel		2
27	角度调整螺栓螺母 - Stop bolt retaining nut	不锈钢 - Stainless steel		2
28	角度调整螺栓螺母 - Stop bolt	不锈钢 - Stainless steel		2

• 易损部件 - Parts subject to wear
•• 更强的系列 DIN471-UNI7436 - Reinforced series DIN471-UNI7436
[0] [4] 只限.140-160 - Valid for mod.140-160

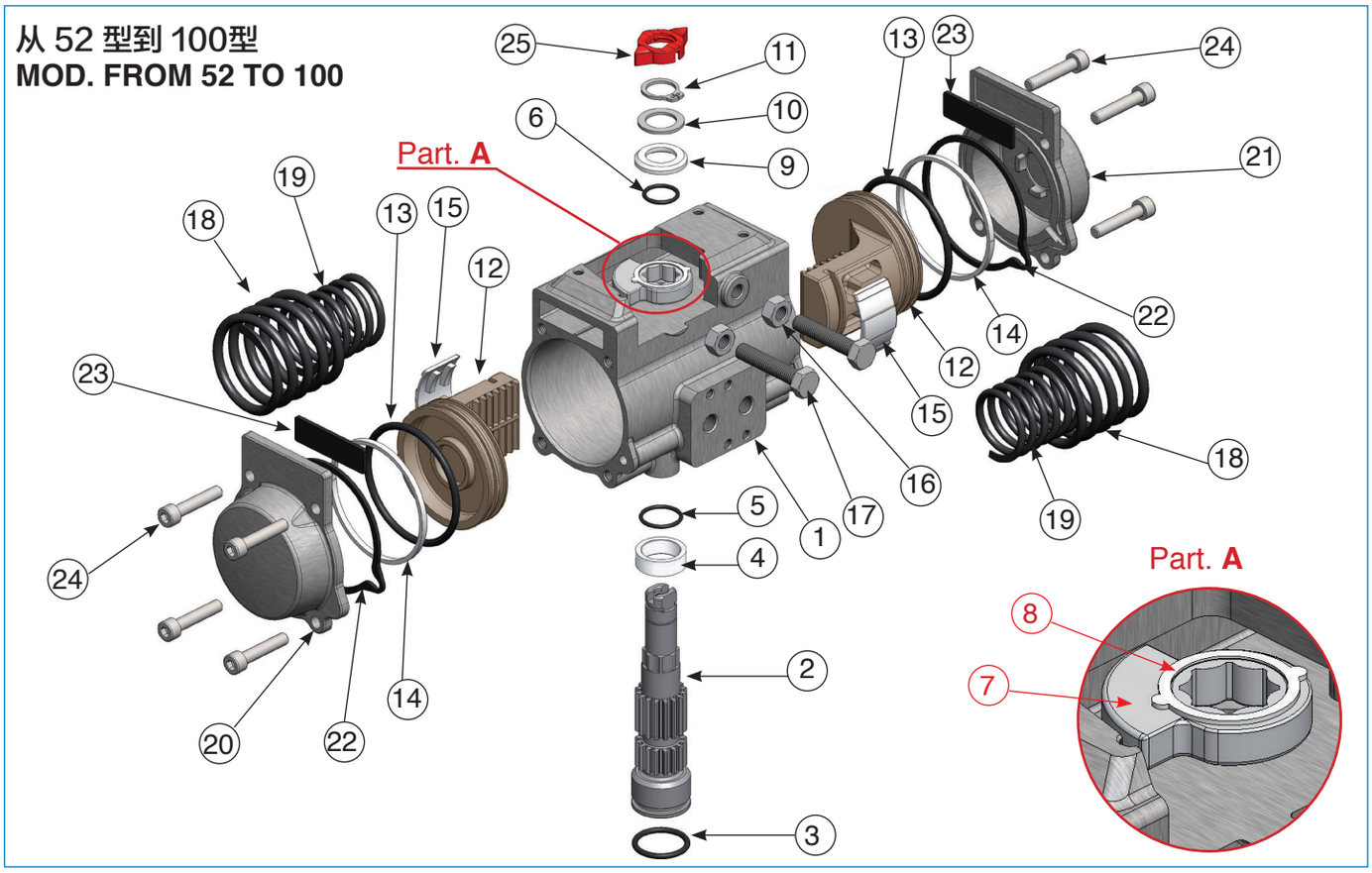

序号. ITEM	部件名称 DESCRIPTION	材料 MATERIAL	表面处理 TREATMENT	数量 DA	数量' SR
1	缸体 - Body	不锈钢 - Stainless steel		1	1
2	防脱出齿条 - Anti-blowout pinion	不锈钢 - Stainless steel		1	1
• 3	O-形圈 - O-ring	NBR		1	1
• 4	隔离环 - Spacer ring	POM		1	1
• 5	O-形圈 - O-ring	NBR		1	1
• 6	O-形圈 - O-ring	NBR		1	1
7	凸轮 - Cam	不锈钢 - Stainless steel		1	1
8	凸轮环 - Spacer	POM		1	1
• 9	隔离环 - Spacer	POM		1	1
10	垫圈 - Washer	不锈钢 - Stainless steel		1	1
11	卡环 - Snap ring	不锈钢 - Stainless steel		1	1
12	活塞 - Piston	压铸铝 - Die cast aluminium	阳极氧化- Hard anodized	2	2
• 13	O-形圈 - O-ring	NBR		2	2
• 14	抗磨环 - Antifriction ring	POM		2	2
• 15	活塞推力块 - Thrust block	POM		2	2
16	角度调整螺栓螺母 - Stop bolt retaining nut	不锈钢 - Stainless steel		2	2
17	角度调整螺栓 - Stop bolt	不锈钢 - Stainless steel		2	2
18	外部弹簧 - External spring	钢 - steel	粉末涂料 (bonderizing) Powder coating (bonderizing)	0	查看22页的弹簧组 See spring setting at page 22
19	内部弹簧 - Internal spring	钢 - steel	粉末涂料 (bonderizing) - Powder coating (bonderizing)	0	
20	右端盖 - Left end cap	不锈钢 - Stainless steel		1	1
21	左端盖 - Right end cap	不锈钢 - Stainless steel		1	1
22	端盖密封座 - End cap seats	NBR		2	2
23	端盖密封座 - End cap seats	NBR		2	2
24	端盖固定螺栓 - End cap fixing screw	不锈钢 - Stainless steel		8	8
25	位置指示器- Position indicator	热塑性 TPE Thermoplastic rubber TPE		1	1

• 易损部件 - Parts subject to wear

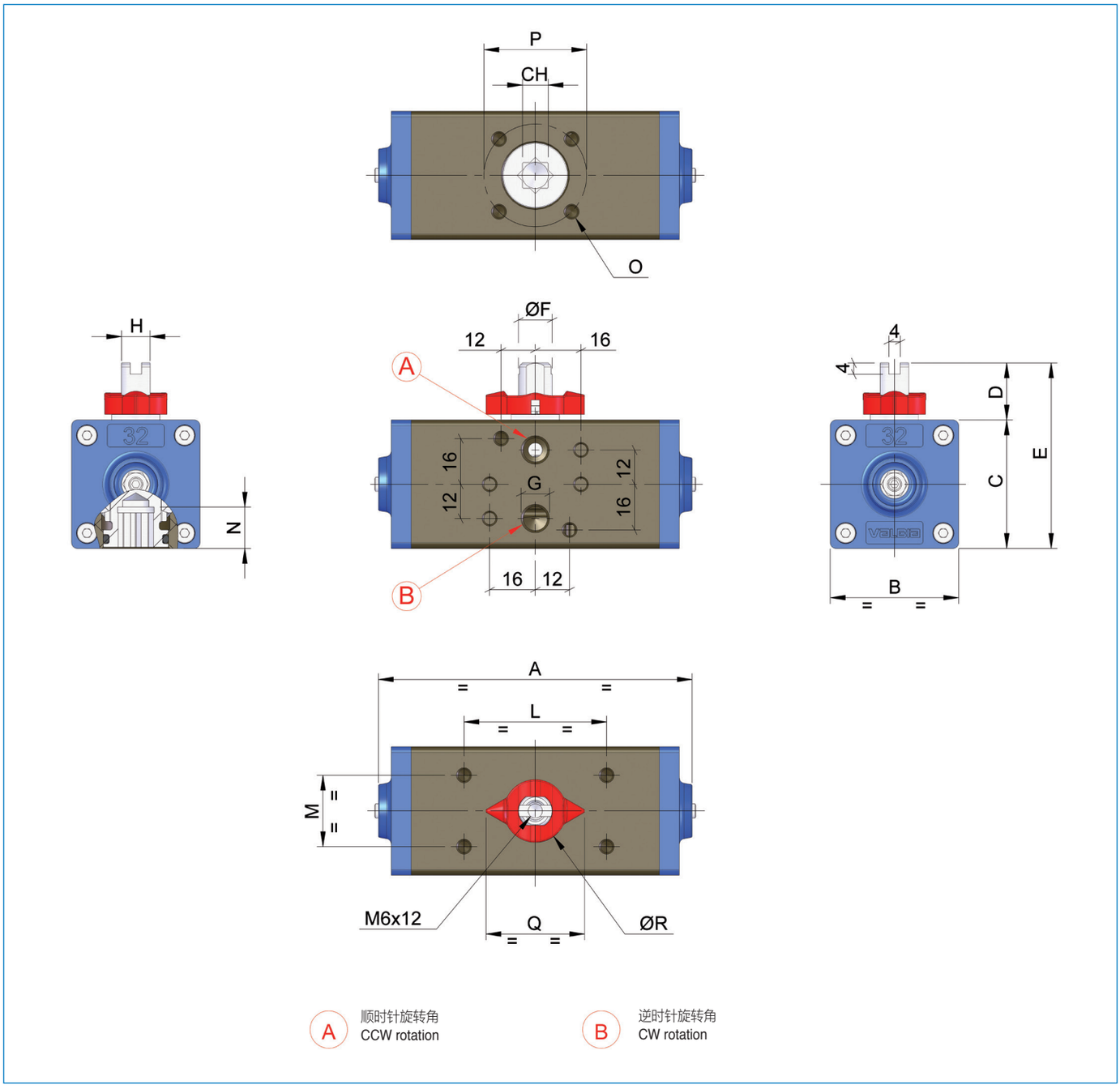

MOD.	孔径 DRILLING ISO 5211	CH	A	B	C	D	E	ØF	G ISO 7/1	H	L	M	N	O	P	Q	øR
32	F03	9	110	45	45	20	65	11,8	1/8”	10	50	25	12	M5x7,5	36	34,5	22

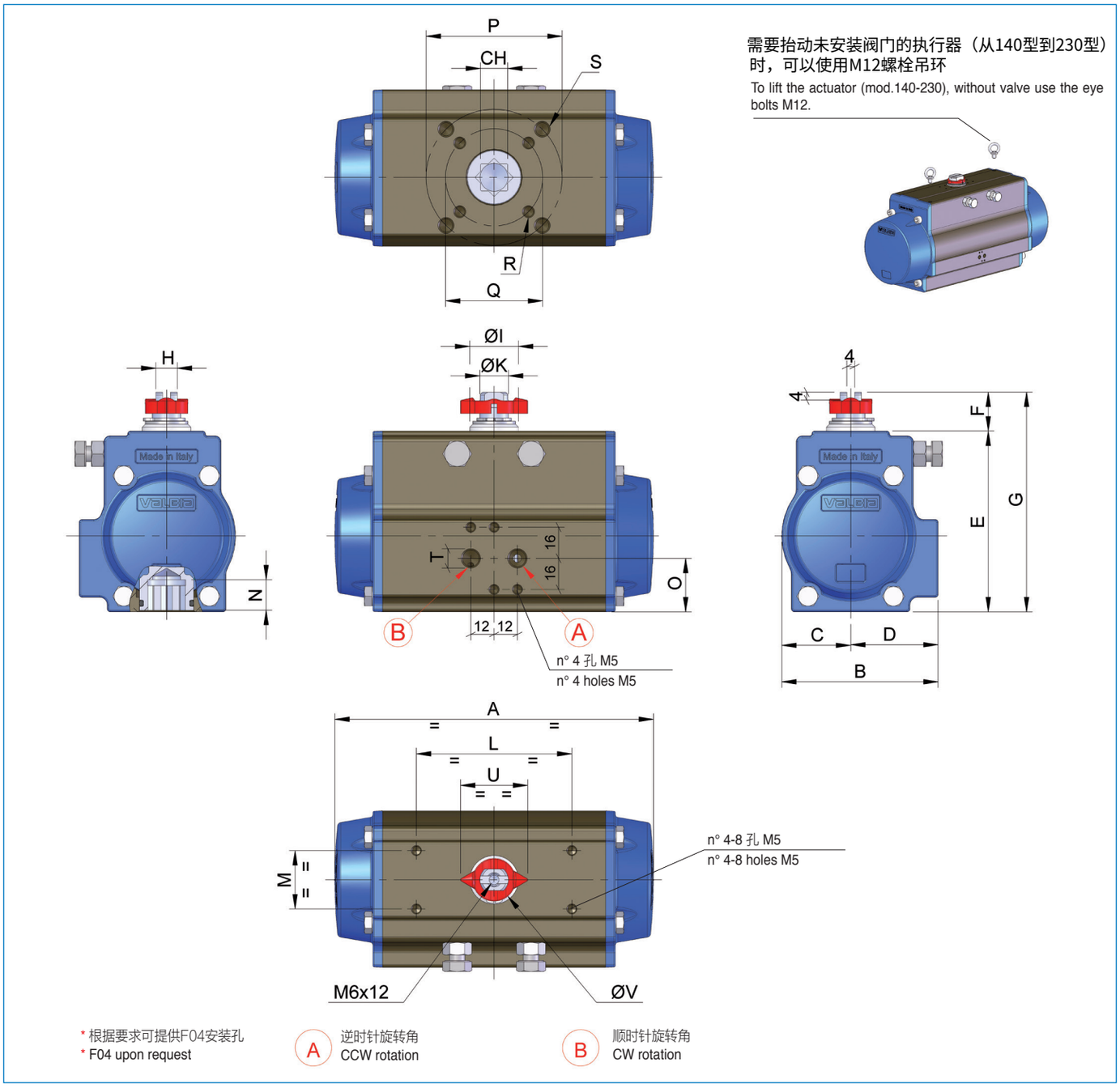

MOD.	孔径 DRILLING ISO 5211	CH	A	B	C	D	E	F	G	H	ØI	ØK	L	M	N	O	P	Q	R	S	T ISO 7/1	U	øV
52	F03-F05 *	11	141	71	30	41	81,5	20	101,5	10	21	12	80	30	12	26,5	50	36	M5X7,5	M6X9	1/8”	34,5	22
63	F05 - F07 *	14	164	80,5	35,5	45	93	20	113	11	25	15	80	30	16	27,5	70	50	M6X8	M8X12	1/8”	34,5	22
75	F05 - F07	17	210	94,5	42	52,5	111,1	20	131	13	29	19	80	30	19	35	70	50	M6X8	M8X12	1/8”	42	29
85	F05 - F07	17	240,5	106	47,5	58,5	125	20	145	15	35	22	80	30	19	42	70	50	M6X8	M8X12	1/8”	42	29
100	F07 - F10	17	275	123	55	68	137,8	20	157,8	15	35	22	80	30	20,5	50	102	70	M8X8	M10X14	1/4”	42	29
115	F07 - F10	22	333	137	64	73	162,4	30	192,4	22	49	32	80/130	30	24	50	102	70	M8X12	M10X15	1/4”	64	44
125	F07 - F10	22	372	148	68	80	174,4	30	204,4	22	49	32	80/130	30	24	61	102	70	M8X12	M10X15	1/4”	64	44
140	F10 - F12	27	435	164	76,5	87,5	197	30	227	24	49	35	80/130	30	29	71	125	102	M10X15	M12X18	1/4”	64	44
160	F10 - F12	27	500	186	87	99	221	30	251	30	57	40	80/130	30	32	80	125	102	M10X14	M12X17	1/4”	80,5	60
180	F10 - F14	36	493	213	98	115	253	30	283	36	62	45	80/130	30	43	99	140	102	M10X15	M16X25	1/4”	80,5	60
200	F14	36	578,5	217	108	109	278	30	308	36	67	50	80/130	30	37	78	140	/	/	M16X24	1/4”	80,5	60
230	F16	** 46	690	248,5	124	124,5	325	30	355	36	67	50	80/130	30	50	92	165	/	/	M20X29	1/4”	80,8	60

** 只有 45° 方形连接 - Only square connection at 45°

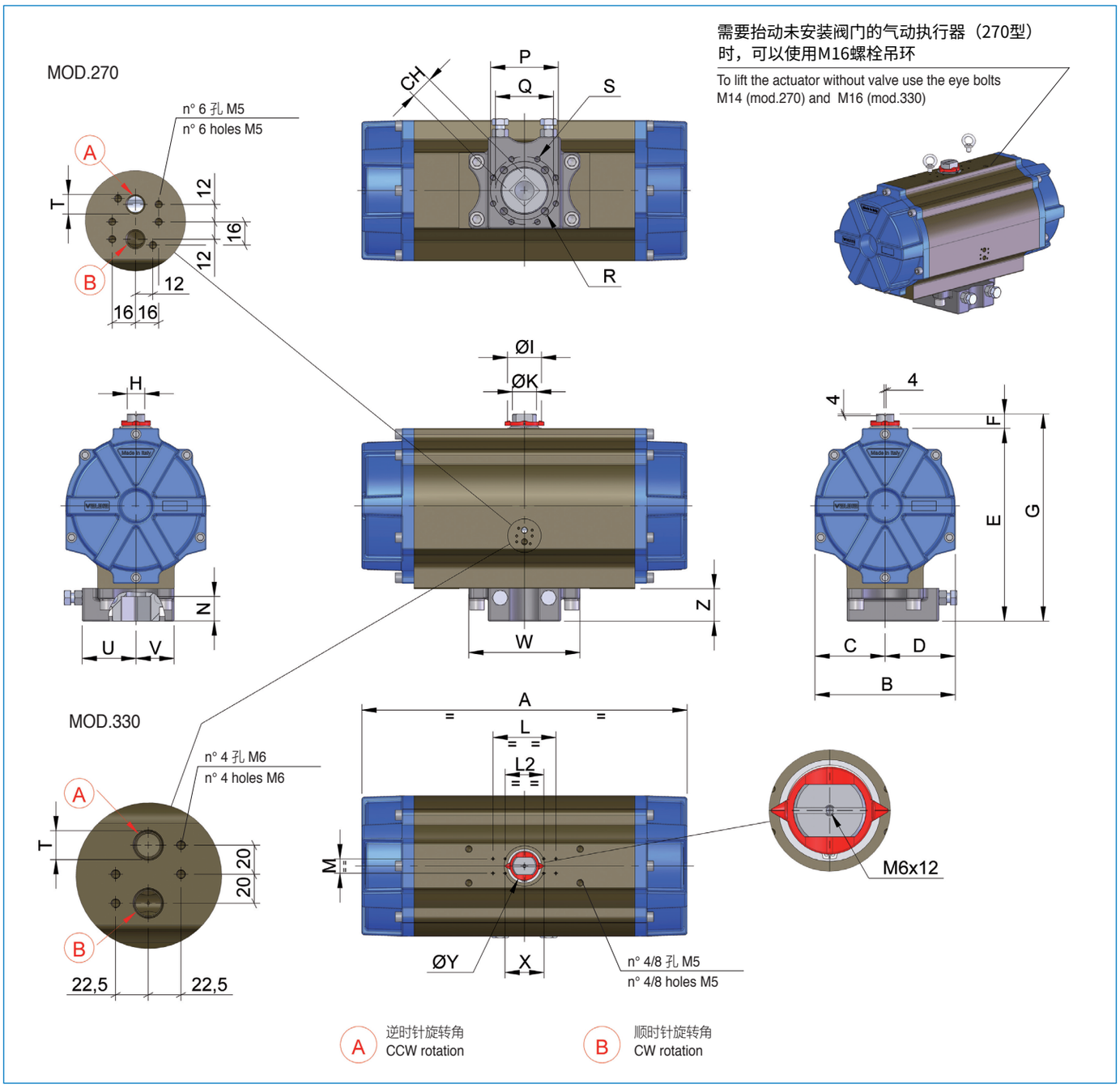

MOD.	孔径 DRILLING ISO 5211	CH	A	B	C	D	E	F	G	H	ØI	ØK	L	L2	M	N	P	Q	R	S	T ISO 7/1	U	V	W	Z	X	ØY
270	F16	46**	672	290	145	145	399	30	429	36	70	50	130	80	30	50	/	165	M20X30	/	1/4”	111	79	230	68	80,5	60
330	F16-F25	55**	881	402	201	201	505	50	555	36	109	50	130	/	30	62	254	165	M20X30	M16X26	1/2”	129	135	297	95	80,5	60

** 只有 45° 方形连接 - Only square connection at 45°

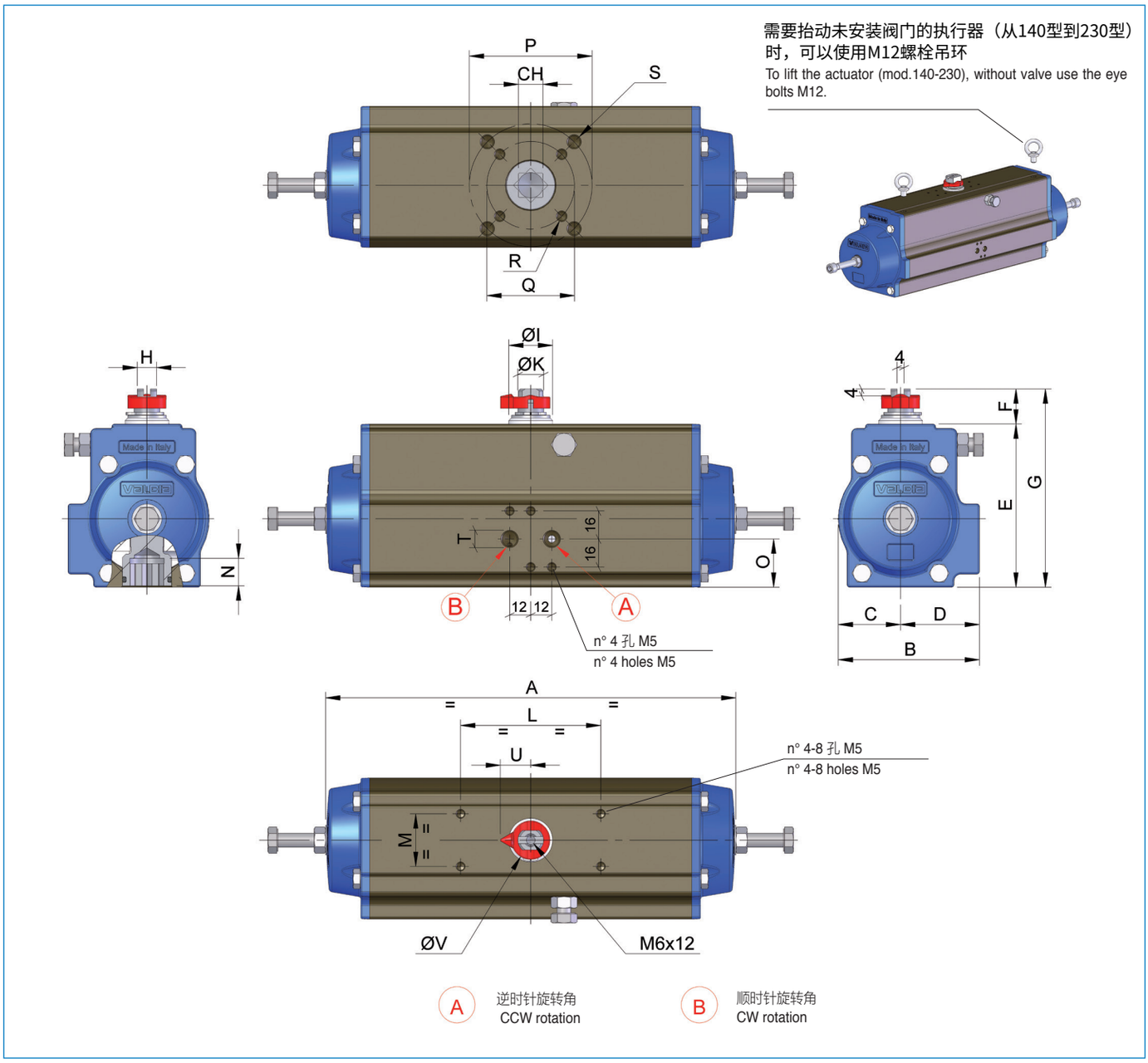

MOD.	孔径 DRILLING ISO 5211	CH	A	B	C	D	E	F	G	H	ØI	ØK	L	M	N	O	P	Q	R	S	T ISO 7/1	U	øV
52	F03-F05	11	197	71	30	41	81,5	20	101,5	10	21	12	80	30	12	26.5	50	36	M5X7,5	M6X9	1/8”	17	22
63	F05 - F07	14	233	80.5	35.5	45	93	20	113	11	25	15	80	30	16	27.5	70	50	M6X8	M8X12	1/8”	17	22
75	F05 - F07	17	298	94.5	42	52.5	111	20	131	13	29	19	80	30	19	35	70	50	M6X8	M8X12	1/8”	21	29
85	F05 - F07	17	341	106	47.5	58.5	125	20	145	15	35	22	80	30	19	42	70	50	M6X8	M8X12	1/8”	21	29
100	F07 - F10	17	388	123	55	68	137,8	20	157,8	15	35	22	80	30	20.5	50	102	70	M8X8	M10X14	1/4”	21	29
115	F07 - F10	22	477	137	64	73	162,4	30	192,4	22	49	32	80/130	30	24	50	102	70	M8X12	M10X15	1/4”	32	44
125	F07 - F10	22	537	148	68	80	174,4	30	204,4	22	49	32	80/130	30	24	61	102	70	M8X12	M10X15	1/4”	32	44
140	F10 - F12	27	610	164	76.5	87.5	197	30	227	24	49	35	80/130	30	29	71	125	102	M10X15	M12X18	1/4”	32	44
160	F10 - F12	27	644	186	87	99	221	30	251	30	57	40	80/130	30	32	80	125	102	M10X14	M12X17	1/4”	40	60

调整螺栓尺寸可根据旋转角度改变 – The dimension of the adjustment screws change according to the angle of rotation needed.

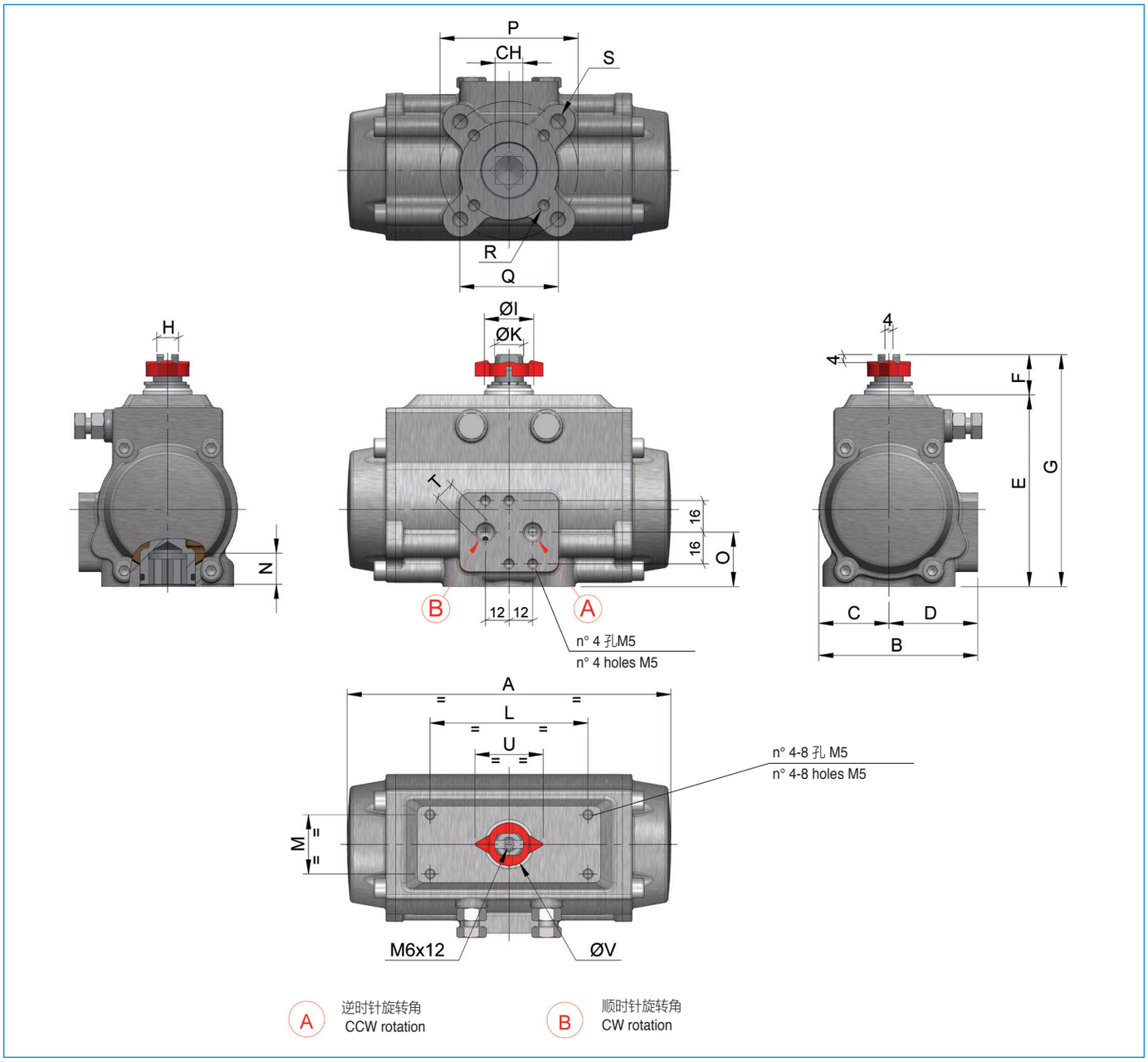

MOD.	孔径 DRILLING ISO 5211	CH	A	B	C	D	E	F	G	H	ØI	ØK	L	M	N	O	P	Q	R	S	T ISO 7/1	U	ØV
52	F03-F05	11	141	71	30	41	85,5	20	105,5	10	21	12	80	30	12	26,5	50	36	M5X7,5	M6X9	1/8"	34,5	22
63	F05-F07	14	164	80,5	35,5	45	97	20	117	11	25	15	80	30	16	27,5	70	50	M6X8	M8X12	1/8"	34,5	22
75	F05-F07	17	210	94,5	42	52,5	115,1	20	135,1	13	29	19	80	30	19	35	70	50	M6X8	M8X12	1/8"	42	29
85	F05-F07	17	240,5	106	47,5	58,5	129	20	149	15	35	22	80	30	19	42	70	50	M6X8	M8X12	1/8"	42	29
100	F07-F10	17	275	123	55	68	143,8	20	163,8	15	35	22	80	30	20,5	52,5	102	70	M8X9	M10X14	1/4"	42	29

双动执行器
DOUBLE ACTING ACTUATOR

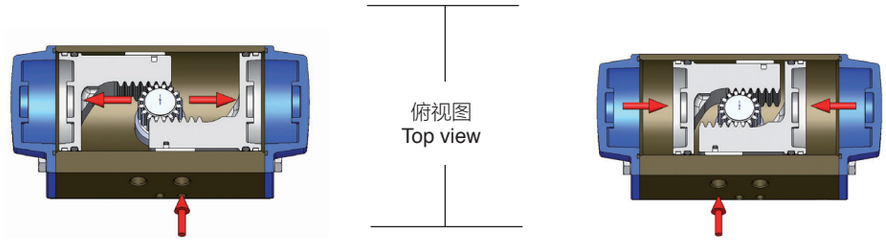

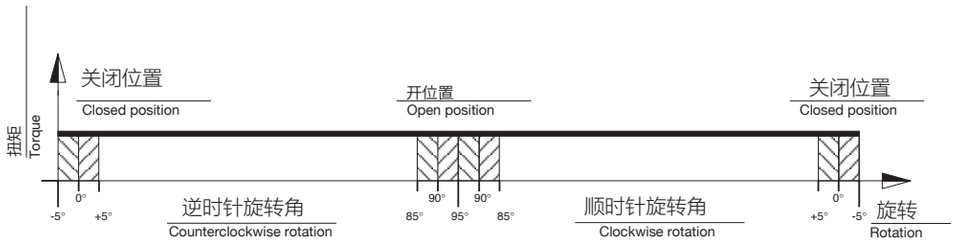

如上图所示，双动执行器的扭矩在整个动作中是保持恒定的。
用户可以参考以下指示，根据要求选择不同的型号：

1.阀门的最大扭矩。
2.根据不同类型阀门以及使用工况，需要增加25-50%的安全扭矩。
3.知道阀门扭矩后，查看扭矩表（相对应的气源压力）找到一个相同或者接近扭矩值（不能低于阀门扭矩）。
4.找到扭矩后再往左看相对应的执行器的型号。

With reference to the above diagram it can be noted that the torque of a double acting actuator remains constant through-out the complete operation.
The user can decide on which model to choose according to the specific requirements, using the following guidelines:
1. define the maximum torque of the valve to automate;
2. to obtain a safety factor increase the torque value chosen by 25-50% (subject to the type of valve and working conditions);
3. once the torque value suggested is obtained consult the torque chart (in relation to the corresponding air pressure) to find a torque value exact or similar to (but not lower than) the one obtained;
4. once the torque value is determined move horizontally to the column “model” to find the suitable actuator model.

单动执行器
SPRING RETEURN ACTUATOR

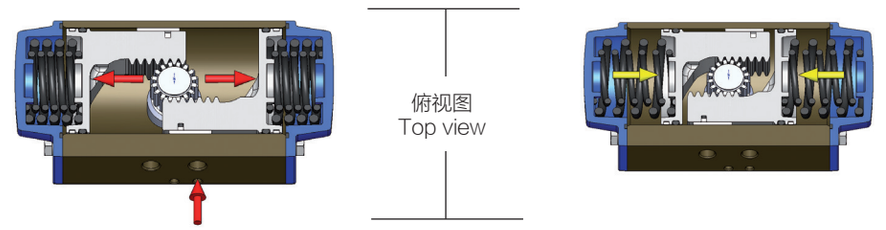

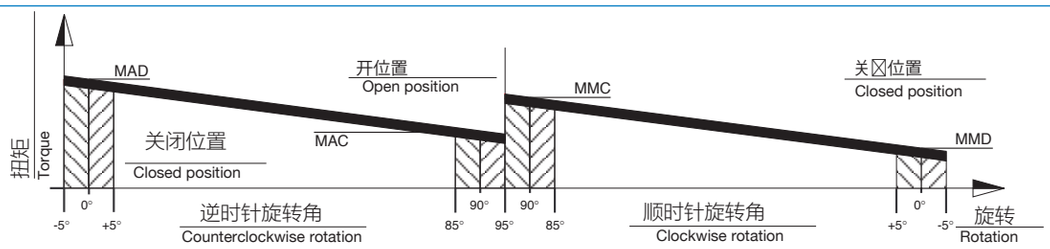

如上图所示，单动执行器的扭矩在动作中不是保持恒定的而是减小。这是由于弹簧的作用，当空气驱动执行器时弹簧是被压缩的，这就阻碍了活塞运动，同时弹簧的力也在聚集，当执行器往反向旋转时，弹簧就会释放力驱动执行器。

执行器的扭矩由以下四个基本值决定：
旋转开启
MAD=弹簧未被压缩时执行器扭矩
MAC=弹簧被压缩时执行器扭矩
旋转关闭
MMC=弹簧未被压缩时执行器扭矩
MMD=弹簧被压缩时执行器扭矩

1.阀门的最大扭矩。
2.根据不同类型阀门以及使用工况，需要增加25-50%的安全扭矩。
3.知道阀门扭矩后，查看扭矩表（相对应的气源压力）找到一个相同或者接近扭矩值（不能低于阀门扭矩），选择一个MMD与MAC之间较低的值。
4. 找到扭矩后再往左看相对应的执行器的型号。

With reference to the above diagram the torque of a spring return actuator is not constant but decreasing. This is due to the action of the springs that when compressed during air actuation counteract the piston movement and accumulate energy which will be available in a decreasing way during the rotation inversion. The torque given by the actuator is defined by four fundamental values.

Opening rotation

MAD = Actuator torque with unfolded springs
MAC = Actuator torque with compressed springs.

Closing rotation

MMC = Torque with compressed springs.
MMD = Torque with unfolded springs
The user can decide on which model to choose according to the specific requirements, using the following guidelines:
1. define the maximum torque of the valve to automate;
2. to obtain a safety factor increase the torque value chosen by 25-50% (subject to the type of valve and working conditions);
3. once the torque value suggested is obtained consult the torque chart (in relation to the corresponding air pressure) to find a torque value exact or similar to (but not lower than) the one obtained, taking account of the lower value between the MMD and MAC values;
4. once the torque value is determined move horizontally to the column “model” to find the actuator model required.

	动作时间(秒) -WORKING TIME (SEC)																	
	类型 TYPE / 尺寸 MODEL		32	52	63	75	85	100	115	125	140	160	180	200	230	270	330
82-84系列 0-90° 旋转角 ROTAZ. 0° -90°	逆时针旋转角(DA) COUNTERCLOCKWISE ROTATION (DA)	CCW	0.03	0,07	0,11	0,18	0,36	0,38	0,60	0,80	1,13	1,43	1,99	3,08	4,15	6,16	5,50
	顺时针旋转角(DA) CLOCKWISE ROTATION (DA)	CW	0.03	0,05	0,10	0,15	0,25	0,34	0,54	0,70	0,94	1,25	1,80	2,41	3,80	5,47	5,50
	逆时针旋转角(SR) COUNTERCLOCKWISE ROTATION (SR)	CCW	-	0,07	0,13	0,32	0,32	0,54	0,92	1,20	1,64	2,27	3,08	3,58	6,20	8,97	6,40
	顺时针旋转角(SR) CLOCKWISE ROTATION (SR)	CW	-	0,07	0,13	0,22	0,30	0,48	0,75	0,94	1,25	1,60	2,38	2,80	5,40	6,62	7,40
83系列 0-180° 旋转角 ROTAZ. 0° -180°	逆时针旋转角 (DA) COUNTERCLOCKWISE ROTATION (DA)	CCW	-	0,08	0,14	0,34	0,42	0,64	1,11	1,87	2,95	3,03	-	-	-	-	-
	顺时针旋转角(DA) CLOCKWISE ROTATION (DA)	CW	-	0,06	0,12	0,25	0,39	0,62	1,08	1,13	2,03	2,29	-	-	-	-	-

标准工作期间按照6 Bar 气源压力 - Approximative times obtained at the pressure of 6 bar without valve.

82-83系列重量 (KG) - WEIGHT CHART (KG) SERIES 82-83															
类型 TYPE / 尺寸 MODEL	32	52	63	75	85	100	115	125	140	160	180	200	230	270	330
DA 90°	0.49	1,12	1,66	2,78	3,90	5,50	8,85	10,80	16,30	21,75	29,00	37,00	58,50	82,67	168
SR 90°	-	1,30	1,97	3,39	4,80	7,00	11,45	14,08	21,80	29,50	39,90	55,00	71,00	100,27	209
DA 180°	-	1,70	2,50	4,20	5,98	8,53	13,65	17,35	25,00	31,20	-	-	-	-	-

84系列不锈钢执行器重量 (KG)- STAINLESS STEEL ACTUATOR WEIGHT CHART (KG) SERIES 84					
类型 TYPE / 尺寸 MODEL	52	63	75	85	100
DA 90°	2,26	3,13	4,96	7,5	10,2
SR 90°	2,44	3,44	5,57	8,35	11,73

	耗气量 - ACTUATOR AIR CONSUMPTION CHART 升：1升= 1000 cm3 Litres: 1 Litre = 1000 cm3																	
	类型 TYPE / 尺寸 MODEL		32	52	63	75	85	100	115	125	140	160	180	200	230	270	330
SERIE 82-84 ROTAZ. 0°-90°	逆时针旋转角(DA/SR) COUNTERCLOCKWISE ROTATION (DA/SR)	CCW	0.04	0.10	0.19	0.36	0.51	0.79	1.29	1.63	2.26	3.61	4,63	5.70	10,68	15,0	25,5
	顺时针旋转角(DA) CLOCKWISE ROTATION (DA)	CW	0.03	0.13	0.23	0.44	0.64	1.00	1.71	2.21	3.16	5,02	6,60	10,55	15,05	17.8	44,2
SERIE 83 ROTAZ. 0°-180°	逆时针旋转角(DA) COUNTERCLOCKWISE ROTATION (DA)	CCW	-	0.17	0.33	0.60	0.90	1.37	2.13	2.90	4.90	5.40	-	-	-	-	-
	顺时针旋转角(DA) CLOCKWISE ROTATION (DA)	CW	-	0.16	0.29	0.56	0.83	1.32	2.25	3.00	3.90	6,32	-	-	-	-	-

为了获得Nl/min的起源工作压力乘以正确的参数在图表中的产值。也就是说，所提供的绝对压力和在一分钟之内的动作数量.
To obtain the air consumption in Nl/min multiply the value in the chart for the correct parameters. That is to say for the supplied absolute pressure and the number of strokes in a minute.

双动执行器 扭矩 “DA” - TORQUE OUTPUT DOUBLE ACTING ACTUATOR “DA” (Nm)

类型 TYPE	气源压力 (bar) - AIR SUPPLY PRESSURE (bar)							
	2,5	3	4	5	5,5	6	7	8
	双动执行器扭矩 (Nm) - TORQUE OUTPUT DOUBLE ACTING ACTUATOR (Nm)							
DA 32	3,5	4,2	6	7,5	8	9	10	11,5
DA 52	9	11	14,5	18,5	20	22	26	30
DA 63	15,5	19	26	33	36	39,5	46,5	53,5
DA 75	29	35	47,5	60	66	72	84,5	97
DA 85	41,5	50,5	68,5	87	96	105	123	141
DA 100	66	80	108	136	150	164,5	193	221
DA 115	109	132	179	226	249	272	319	366
DA 125	143,5	174	235	297	327	358	419	481
DA 140	205	246	328	410	451	493	575	657
DA 160	287	344	458	573	630	688	802	917
DA 180	395	474	632	789	868	947	1105	1263
DA 200	532	638	851	1063	1170	1276	1489	1701
DA 230	879	1055	1406	1758	1934	2109	2461	2812
DA 270	1292	1550	2067	2584	2842	3101	3617	4134
DA 330	2299	2759	3679	4599	5059	5519	6438	7358

单动执行器弹簧组 “SR - SPRING SETS FOR SPRING RETURN ACTUATOR “SR”

可用从 MOD. 52 到 MOD. 140
VALID FROM MOD. 52 TO MOD. 140

弹簧组
SPRING SETS

标准 – STANDARD SET 05

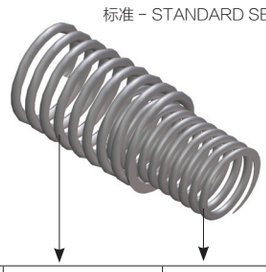

SET	外部弹簧 EXTERNAL SPRING	内部弹簧 INTERNAL SPRING
01	1	1
02	2	-
03	1	2
04	2	1
05	2	2

可用从 MOD. 160 到 MOD. 200
VALID FROM MOD. 160 TO MOD. 200

弹簧组
SPRING SETS

标准 – STANDARD SET 06

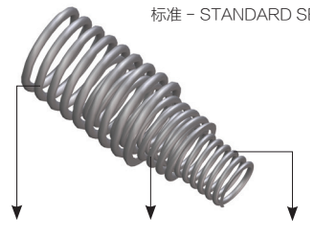

SET	外部弹簧 EXTERNAL SPRING	中间弹簧 CENTRAL SPRING	内部弹簧 INTERNAL SPRING
01	-	2	-
02	2	-	-
03	1	2	-
04	2	-	2
05	2	2	-
06	2	2	2

可用从 MOD. 230 到 MOD. 330
VALID FROM MOD. 230 TO MOD. 330

弹簧组
SPRING SETS

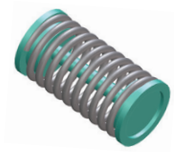

预张弹簧
PRETENSIONED SPRING

SET	N° 每侧弹簧数量 N° OF SPRINGS FOR EACH SIDE		
01	2/3	MOD.230	MOD.270 e 330
02	3/3		
03	3/4		
04	4/4		
05	4/5		
06	5/5		
07	5/6		
08	6/6		

MOD	SET	扭矩 弹簧扭矩 (Nm) SPRING TORQUE (Nm)		气源工作压力(bar) (bar) – AIR SUPPLY PRESSURE (bar)															
				2,5		3		4		5		5,5		6		7		8	
				单动执行器扭矩(Nm) – TORQUE OUTPUT SPRING RETURN ACTUATORS (Nm)															
		0° MMD	90° MMC	0° MAD	90° MAC	0° MAD	90° MAC	0° MAD	90° MAC	0° MAD	90° MAC	0° MAD	90° MAC	0° MAD	90° MAC	0° MAD	90° MAC	0° MAD	90° MAC
SR52	01	3.6	4.9	4.5	1.6	6.4	3.5	10.2	7.4										
	02	4.8	6.7			5.2	1.7	9.0	5.6	12.8	9.4								
	03	5.2	7.5					8.6	4.8	12.4	8.6	14.3	10.5	16.2	12.4				
	04	6.5	9.3					7.3	3.0	11.2	6.8	13.1	8.7	15.0	10.6	18.8	14.5		
	05	8.1	11.9							9.5	4.3	11.4	6.2	13.3	8.1	17.1	11.9	20.9	15.7
SR63	01	5.0	9.6	8.6	2.6	12.0	6.0	18.9	12.8										
	02	6.6	12.3			10.5	3.2	17.4	10.1	24.2	17.0								
	03	8.0	14.5					15.9	7.9	22.8	14.8	26.2	18.2	29.6	21.7				
	04	9.6	17.2					14.4	5.2	21.2	12.0	24.6	15.5	28.1	18.9	34.9	25.8		
	05	12.5	22.1							18.2	7.1	21.7	10.6	25.1	14.0	31.9	20.9	38.8	27.7
SR75	01	10.1	19.5	15.8	3.9	22.0	10.1	34.4	22.5										
	02	13.3	25.6			18.8	4.0	31.2	16.4	43.5	28.7								
	03	15.1	28.2					29.4	13.8	41.8	26.1	48.0	32.3	54.1	38.5				
	04	18.3	34.3					26.2	7.7	38.6	20.0	44.8	26.2	50.9	32.4	63.3	44.8		
	05	23.2	43.0							33.6	11.3	39.8	17.5	46.0	23.7	58.3	36.1	70.7	48.4
SR85	01	16.1	27.3	22.2	7.6	31.3	16.6	49.5	34.8										
	02	19.9	33.7			27.6	10.3	45.7	28.4	63.9	46.6								
	03	24.3	40.8					41.3	21.3	59.4	39.5	68.5	48.6	77.6	57.6				
	04	28.1	47.1					37.5	15.0	55.7	33.1	64.8	42.2	73.8	51.3	92.0	69.4		
	05	36.3	60.6							47.5	19.6	56.6	28.7	65.6	37.8	83.8	55.9	101.9	74.1
SR100	01	24.6	44.6	36.0	10.1	50.2	24.2	78.4	52.5										
	02	32.6	58.9			42.2	9.9	70.5	38.1	98.7	66.4								
	03	35.9	63.7					67.1	33.3	95.4	61.6	109.5	75.7	123.6	89.9				
	04	43.9	78.0					59.1	19.0	87.4	47.3	101.5	61.4	115.7	75.5	143.9	103.8		
	05	55.2	97.2							76.1	28.1	90.2	42.3	104.3	56.4	132.6	84.7	160.8	112.9
SR115	01	41.0	74.4	61.3	18.4	84.7	41.8	131.4	88.5										
	02	50.7	94.4			74.9	21.8	121.6	68.5	168.3	115.2								
	03	60.8	108.1					111.6	54.7	158.3	101.5	181.6	124.8	205.0	148.2				
	04	70.6	128.1					101.8	34.8	148.5	81.5	171.9	104.9	195.2	128.2	241.9	174.9		
	05	90.4	161.8							128.7	47.8	152.0	71.1	175.4	94.5	222.1	141.2	268.8	187.9
SR125	01	53.1	99.1	80.2	21.2	110.9	51.9	172.2	113.2										
	02	63.3	117.5			100.7	33.5	162.1	94.8	223.4	156.1								
	03	81.1	148.4					144.2	63.9	205.5	125.2	236.2	155.9	266.8	186.5				
	04	91.3	166.9					134.1	45.5	195.4	106.8	226.1	137.5	256.7	168.1	318.0	229.4		
	05	119.2	216.2							167.4	57.5	198.1	88.1	228.7	118.8	290.1	180.1	351.4	241.4
SR140	01	82	152	119	36	160	77	242	159										
	02	92	172			149	56	231	138	313	220								
	03	117	221					205	86	287	168	328	209	369	250				
	04	128	240					193	64	275	146	316	187	358	229	440	311		
	05	164	308							238	72	279	114	320	155	402	237	484	319
SR160	01	83	131	199	148	256	205												
	02	119	188			218	145	332	259										
	03	143	225			193	105	307	219	422	334								
	04	185	292					262	148	377	263	434	320						
	05	202	319							358	235	415	292	473	350				
	06	268	423									346	181	404	239	518	353	633	468
SR180	01	102	168	287	217	366	296												
	02	160	252			304	206	462	364										
	03	182	294			281	162	439	320	596	477								
	04	262	414					354	196	511	353	590	432						
	05	262	420							511	343	590	422	669	501				
	06	364	582									482	254	561	333	719	491	877	649
SR200	01	169	251	353	269	459	375												
	02	237	353			381	262	594	475										
	03	288	428			330	188	543	401	755	613								
	04	338	522					483	295	695	507	802	614						
	05	406	604							626	425	733	532	839	638				
	06	507	773									622	352	728	458	941	671	1153	883
SR230	01	389	666	466	172	642	348	993	699										
	02	466	799			560	206	911	557										
	03	544	933					828	416	1180	768								
	04	622	1066					746	274	1098	626	1274	802						
	05	700	1199					663	133	1015	485	1191	661	1366	836				
	06	777	1332							933	343	1109	519	1284	694	1636	1046	1987	1397
SR270	01	506	791	780	490	1044	754	1572	1282										
	02	607	949	672	324	936	588	1464	1116										
	03	708	1107	564	158	828	422	1356	950	1884	1478								
	04	810	1265			721	257	1249	785	1777	1313	2041	1577						
	05	911	1423					1141	619	1669	1147	1933	1411	2197	1675				
	06	1012	1581					1033	453	1561	981	1825	1245	2089	1509				
	07	1113	1740					925	287	1453	815	1717	1079	1981	1343	2508	1870		
	08	1214	1898					817	121	1345	649	1609	913	1873	1177	2400	1704	2928	2232
SR330	01	884	1372	1361	842	1821	1302	2741	2222										
	02	1060	1647	1173	550	1633	1010	2553	1930										
	03	1237	1921	985	259	1445	719	2365	1639	3285	2559								
	04	1414	2196			1258	427	2178	1347	3098	2267	3558	2727						
	05	1591	2470					1990	1056	2910	1976	3370	2436	3830	2896				
	06	1767	2745					1802	764	2722	1684	3182	2144	3642	2604				
	07	1944	3019					1615	473	2535	1393	2995	1853	3455	2313	4374	3232		
	08	2121	3294							2347	1101	2807	1561	3267	2021	4186	2940	5106	3860

特殊产品 - SPECIAL VERSION

高温：可承受温度可达150℃。

High temperature: to withstand temperatures up to 150° C.

低温：可用于零下40℃的操作环境。

Low temperature: for applications that require the use down to -40° C.

303 不锈钢齿条。

With 303 stainless steel pinion.

镀镍：通过对执行器整个表面进行均匀镀镍，增强其抗腐蚀性，使其能够在苛刻的环境下工作。
同样也适用于医药和食品行业以及所有这些含碱性和清洁剂的领域。

Nickel plated: process developed for the actuator protection in harsh environments through the application of an uniform coating over the entire surface, in order to give the actuator a higher protection against corrosion. Suitable also in the pharmaceutical and food industries and in all those sectors where alkaline solutions and cleaning agents are used.

PTFE 涂层：通过对执行器整个表面进行喷涂PTFE 材质，并用烤箱固化涂层，使执行器可以在强腐蚀性的海洋环境中以及高温环境中使用。同样也被广泛地应用到其他工业中。

With PTFE coating: coating applied by spray technique over the entire actuator surface and cured in the oven. It provides excellent corrosion protection to marine environments, environments with high temperatures and ensures great antistick properties; it is also used in a wide range of industrial applications.

82系列，0-90 °- ACTUATOR SERIES 82 0°-90°

双动气动执行器 "DA" - DOUBLE ACTING PNEUMATIC ACTUATOR "DA"

MODELLO - MODEL	DA 32	DA 52	DA 63	DA 75	DA 85	DA 100	DA 115	DA 125	DA 140	DA 160	DA 180	DA 200	DA 230	DA 270	DA 330
CODICE - CODE	82DA0007	82DA0010	82DA0012	82DA0075	82DA0014	82DA0018	82DA0070	82DA0019	82DA0020	82DA0079	82DA0080	82DA0021	82DA0023	82DA0077	82DA0033

单动气动执行器 - SPRING RETURN PNEUMATIC ACTUATOR "SR"

MODELLO - MODEL	SR 52	SR 63	SR 75	SR 85	SR 100	SR 115	SR 125	SR 140	SR 160	SR 180	SR 200	SR 230	SR 270	SR 330
CODICE - CODE	82SR0010	82SR0012	82SR0075	82SR0014	82SR0018	82SR0070	82SR0019	82SR0020	82SR0079	82SR0080	82SR0021	82SR0023	82SR0077	82SR0033

83系列，0-180 °- ACTUATOR SERIES 83 0°- 180°

VERSIONE ROTAZIONE 0° - 180° - VERSION 0° - 180°

MODELLO - MODEL	DA 52	DA 63	DA 75	DA 85	DA 100	DA 115	DA 125	DA 140	DA 160
CODICE - CODE	83DA0010	83DA0012	83DA0075	83DA0014	83DA0018	83DA0070	83DA0019	83DA0020	83DA0079

84系列，不锈钢材质，0-90 ° - STAINLESS STEEL A351 CF8M ACTUATOR SERIES 84 0°-90°

双动气动执行器 - DOUBLE ACTING PNEUMATIC ACTUATOR "DA"

MODELLO - MODEL	DA 52	DA 63	DA 75	DA 85	DA 100
CODICE - CODE	84DA0010	84DA0012	84DA0075	84DA0014	84DA0018

单动气动执行器 - SPRING RETURN PNEUMATIC ACTUATOR "SR"

MODELLO - MODEL	SR 52	SR 63	SR 75	SR 85	SR 100
CODICE - CODE	84SR0010	84SR0012	84SR0075	84SR0014	84SR0018

镀镍执行器 - NICKEL PLATED ACTUATOR

ATTUATORE NICHELATO -NICKEL PLATED ACTUATOR *

MODELLO - MODEL	32	52	63	75	85	100	115	125	140	160	180	200	230	270	330
CODICE - CODE DA	82DA1007	82DA1010	82DA1012	82DA1075	82DA1014	82DA1018	82DA1070	82DA1019	82DA1020	82DA1079	82DA1080	82DA1021	82DA1023	82DA1077	82DA1033
CODICE - CODE SR	-	82SR1010	82SR1012	82SR1075	82SR1014	82SR1018	82SR1070	82SR1019	82SR1020	82SR1079	82SR1080	82SR1021	82SR1023	82SR1077	82SR1033

* Il trattamento comprende tappi e cilindro. Per ulteriori varianti consultare l'ufficio commerciale - The treatment includes caps and cylinder. For any other execution please contact our sales department.

P.T.F.E涂层执行器- P.T.F.E COATED ACTUATOR

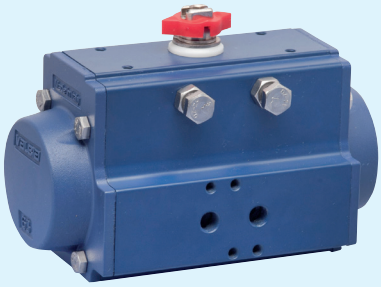

ATTUATORE VERNICIATO P.T.F.E - P.T.F.E COATED ACTUATOR *

MODELLO - MODEL	32	52	63	75	85	100	115	125	140	160	180	200	230	270	330
CODICE - CODE DA	82DAB607	82DAB610	82DAB612	82DAB675	82DAB614	82DAB618	82DAB670	82DAB619	82DAB620	82DAB679	82DAB680	82DAB621	82DAB623	82DAB677	82DAB633
CODICE - CODE SR	-	82SRB610	82SRB612	82SRB675	82SRB614	82SRB618	82SRB670	82SRB619	82SRB620	82SRB679	82SRB680	82SRB621	82SRB623	82SRB677	82SRB633

* Il trattamento comprende tappi e cilindro. Per ulteriori varianti consultare l'ufficio commerciale - The treatment includes caps and cylinder. For any other execution please contact our sales department.

To be added to the pneumatic actuator base price or valve + actuator base price.

高温型	32	52	63	75	85	100	115	125	140	160	180	200	230	270	330
CODICE - CODE DA	82DA0407	82DA0410	82DA0412	82DA0475	82DA0414	82DA0418	82DA0470	82DA0419	82DA0420	82DA0479	82DA0480	82DA0421	82DA0423	82DA0477	82DA0433
CODICE - CODE SR		82SR0410	82SR0412	82SR0475	82SR0414	82SR0418	82SR0470	82SR0419	82SR0420	82SR0479	82SR0480	82SR0421	82SR0423	82SR0477	82SR0433
低温型 - 40°C															
CODICE - CODE DA	-	82DA1210	82DA1212	82DA1275	82DA1214	82DA1218	82DA1270	82DA1219	82DA1220	82DA1279	82DA1280	82DA1221	82DA1223	82DA1277	82DA1233
CODICE - CODE SR	-	82SR1210	82SR1212	82SR1275	82SR1214	82SR1218	82SR1270	82SR1219	82SR1220	82SR1279	82SR1280	82SR1221	82SR1223	82SR1277	82SR1233
303不锈钢齿轮															
CODICE - CODE DA	82DA0907	82DA0910	82DA0912	82DA0975	82DA0914	82DA0918	82DA0970	82DA0919	82DA0920	82DA0979	82DA0980	82DA0921	82DA0923	82DA0977	82DA0933
CODICE - CODE SR	-	82SR0910	82SR0912	82SR0975	82SR0914	82SR0918	82SR0970	82SR0919	82SR0920	82SR0979	82SR0980	82SR0921	82SR0923	82SR0977	82SR0933
ISO 5211 F04 安装孔															
CODICE - CODE DA	-	82DA0610	82DA0612	-	-	-	-	-	-	-	-	-	-	-	
CODICE - CODE SR	-	82SR0610	82SR0612	-	-	-	-	-	-	-	-	-	-	-	

NOTE

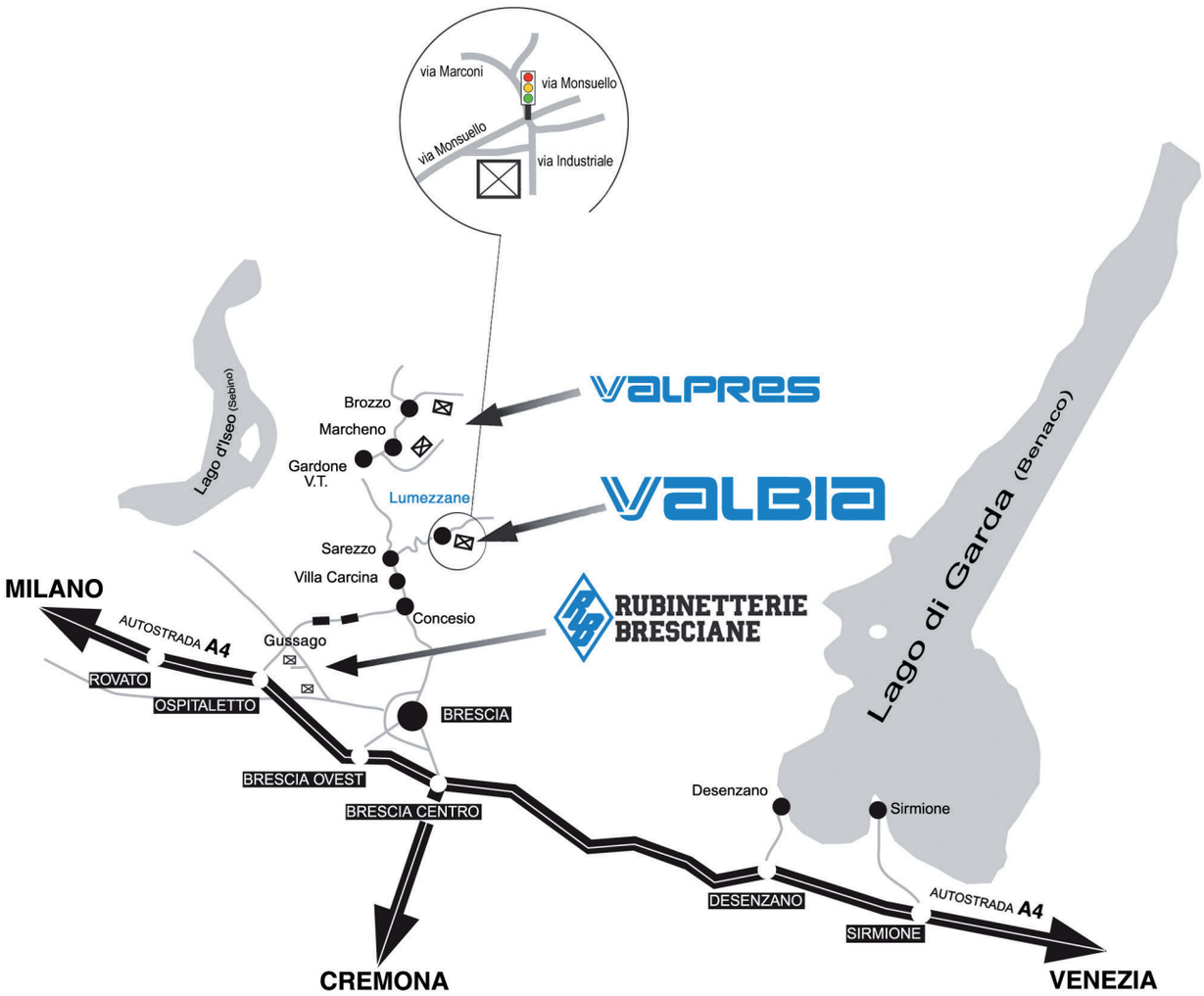
via Marconi
via Monsuello
via Monsuello
via Industriale
Lago d'Iseo (Sebino)
Brozzo
Marcheno
Gardone V.T.
Lumezzane
Sarezzo
Villa Carcina
Concesio
Gussago
VALPRES
VALBIA
RUBINETTERIE BRESCIANE
Lago di Garda (Benaco)
MILANO
AUTOSTRADA A4
ROVATO
OSPITALETTO
BRESCIA
BRESCIA OVEST
BRESCIA CENTRO
CREMONA
Desenzano
Sirmione
DESENZANO
SIRMIONE
AUTOSTRADA A4
VENEZIA

VALBIA S.r.l.
Via Industriale, 30 - 25065 Lumezzane S.S. (BS) Italia
N. 45° 38’ 57.084” - E. 10° 15’ 35.172”
Tel. +39 030 8969411 - Fax +39 030 8610014
www.valbia.it - E-mail valbia@bonomi.it

Download on iTunes

Google play

N.174.10

© VALBIA S.r.l. 2017 版权所有 - All rights reserved and 为注册商标 - are registered trademarks.

为确保产品的最高性能，我们保留修改相关参数的权利，恕不另行通知。
To ensure the quality and technical standards at the highest level, the manufacturer reserves the right to alter the specifications without notice.
This documentation supersedes and replaces all previous editions.